GUARDIAN®
EMERGENCY BACK UP WATER POWERED SUMP PUMP

Before you start...

Read through this manual before beginning to install the Guardian®, and familiarize yourself with the photo shown here, which labels all of Guardian's® parts and shows a typical installation. After you've done that you will want to:

1. The Guardian® is a Back-up sump pump. A primary pump is required.
2. Assure that the sump crock is free of all debris; i.e. stone, mud, dirt, or anything which may plug up the pump.
3. Check for water supply. The water supply connects to the brass 3/4" check valve. Minimum inlet water pressure is 29 PSI, and minimum inlet I.D. is 3/4". Maximum inlet pressure is 150 PSI.
4. Check for discharge. The discharge attaches to the gray 1 1/4" PVC pipe. A discharge line seperate from the existing sump pump discharge is required.
5. **Requirements for connection to the plumbing system:**

   A dedicated shut-off valve shall be installed on the water supply line within 1.8 m (6 ft) of the pump.

   The water supply piping shall be made of materials and methods approved by the local plumbing codes.

   Garden hoses shall not be used for the supply line.

   The water supply and discharge piping shall each have a union or other quick-disconnect fitting to make the pump accessible for servicing.

   The discharge of water-powered sump pumps shall not be connected to the discharge piping of existing sump pumps; and the discharge piping for water-powered sump pumps shall:

   (i) have an air gap; and

   (ii) extend outside of the building with the end of the pipe between 150 and 610 mm (6 and 24 in) about the ground or the flood level of the area receiving the discharge.

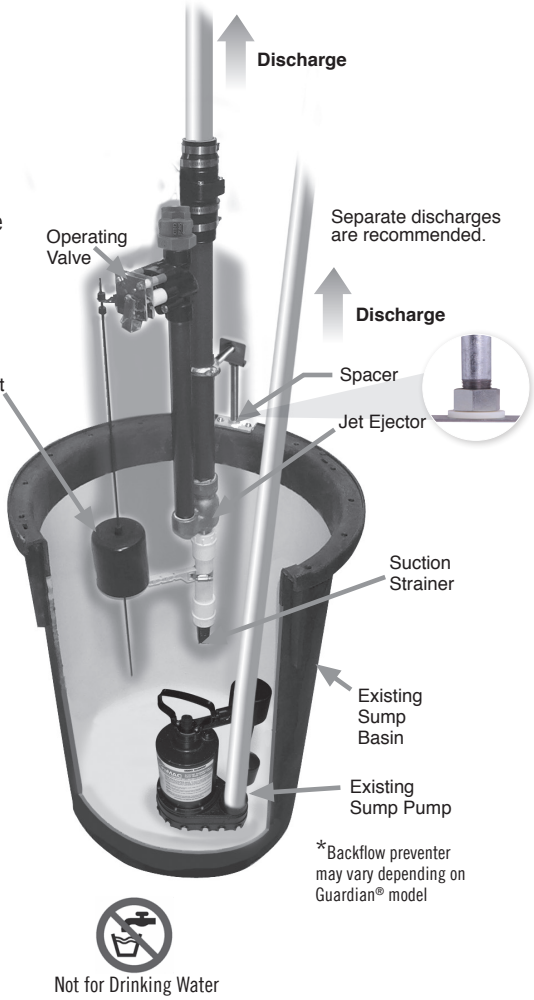

WARNING

Sump water can contain high levels of dangerous contaminants, including sewage. To reduce the rist of contamination of the potable water supply, this pump must be installed with a listed backflow prevention device suitable for the installation, in accordance with the local plumbing code, such as a reduced pressure zone backflow preventer (RPZ). Alternatively, consult the local plumbing and health codes or the authority having jurisdiction for guidance on cross-connection and backflow pretection requires.

6. **Disconnect all power to primary sump pump before starting the Guardian® installation. Failure to do so may result in electric shock.**

Installation in 7 easy steps:

Step 1

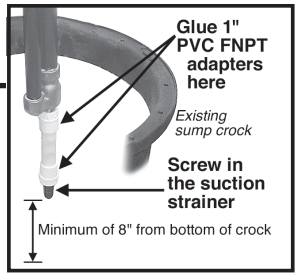

Measure the depth of your basin. Then, cut the white PVC pipe to allow 8" to the bottom of the basin. The black operating valve and switch at the top of the pump must reach above the top of the basin. Next, for the suction, connect the 1" PVC FNPT adapters and the 1" PVC pipe (supplied with the pump). Then, connect the suction strainer. Be sure to use an approved PVC cleaner and cement.

Check valve chatter and what to do: Ideal installation of the suction line and strainer is approximately 8" from the sump floor. However, each installation is unique. Due to the nature of some drainage systems, a negative pressure may result in the discharge line as water moves toward its point of disposal. This may cause check valve chatter. In these cases it is recommended that the suction line inlet remain submersed in water. **Failure to eliminate check valve chatter may result in premature check valve failure and cause a flood.**

Step 2

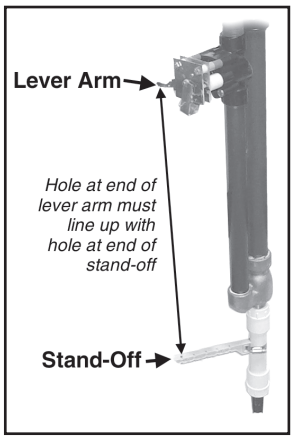

Mount the stand-off onto the 1" PVC pipe from step 1, below the brass body with the stainless steel hose clamp. The hole at the end of the stand-off needs to line up with the hole at the end of the lever arm. This will allow the vertical float rod to be parallel with the pump. It is recommended that the stand-off bracket be mounted below the float. Make sure the float does not interfere with the stand-off bracket (see step 3).

Step 3

Slide the black rubber stops and float onto the float rod. The first stop (1) goes approximately 12" from the bottom of the rod. Next, slide the float on, make sure the arrow points DOWN (hollow side down). Push the float up to the first stop. The second stop (2) is placed at the bottom of the float. Insert the float rod into the stand-off hole. (4"-5" should protrude below the stand-off.) The third stop (3) goes 2"-3" from the top of the rod. Next, put the rod through the lever arm. The forth stop (4) goes on top of the lever arm about 1/2" above the third tab. The rod must stay in the stand-off as it rises up and flips the lever arm. If it pops out, re-adjust the stops.

NOTE: The Guardian® Pump float mechanism must be installed above normal operating levels of the primary sump pump with the hollow side down.

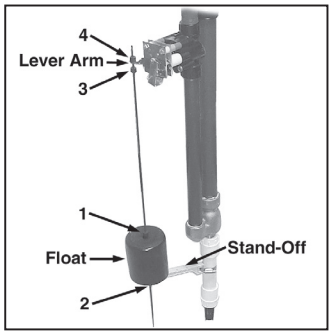

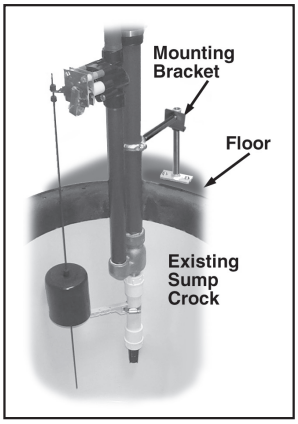

Step 4

Attach the mounting bracket to the floor and to the pump. Remember the black operating valve and switch go above the top of the basin. Look on the front photo to see where the Guardian® should be installed relative to your existing pump.

Step 5

FLUSH SUPPLY LINE BEFORE INSTALLATION

The supply line to the pump **must** be the first branch in the water supply system. **Failure to comply may result in a scald hazard.** The minimum water supply must be 3/4" I.D. and the minimum inlet pressure must be 29 PSI.

WARNING

Sump water can contain high levels of dangerous contaminants, including sewage. To reduce the rist of contamination of the potable water supply, this pump must be installed with a listed backflow prevention device suitable for the installation, in accordance with the local plumbing code, such as a reduced pressure zone backflow preventer (RPZ). Alternatively, consult the local plumbing and health codes or the authority having jurisdiction for guidance on cross-connection and backflow pretection requires.

Step 6

Connect the water supply line to the 3/4" brass inlet of the check valve. If you are replacing the switch-valve assembly, **do not use teflon tape! Use supplied thread sealant!**

A full port valve approved for water service along with a downstream union should be installed to isolate the pump from the water system. The Guardian® Pump must be the only fixture supplied by that branch.

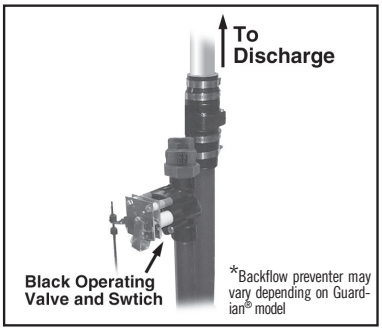

Step 7

Install a check valve (not supplied) on the 1 1/4" gray PVC discharge pipe. It is required that the discharge is separate from the electric pump discharge.

Power must be turned off to any pump(s) being permanently installed; as well as, providing temporary pumping to an approved point of disposal during installation. Once the discharge piping has been properly installed, the existing electrical sump pump may be re-energized using caution to check for any leaks. It is important that the water supply to the Guardian® Pump remain off until it's installation is complete.

Affix supplied orange "Warning" label to discharge pipe so it is visible at eye level.

INITIAL START - UP AND OPERATION

1. Test the installation for leaks by running water in the sump, allowing for normal operation of the primary pump.
2. Turn on the water supply to the Guardian® Pump. A small amount of water may discharge from the backflow preventer while the system is coming up to pressure. This is normal. The Guardian® Pump may also activate momentarily. This is also normal. At this point the installer may check the installation for any leaks on the supply side of the Guardian® Pump.
3. Once the system has been verified to be free of leaks, disconnect power from the primary electrical sump pump and allow water to rise in the sump until it activates the Guardian® Pump.
4. After the Guardian® Pump has been tested, reconnect the existing primary electrical sump pump to its power source.
5. **A final check of the existing primary electrical sump pump float and the Guardian® float is mandatory to assure that no obstructions will affect the proper motion of the float. If the float does not operate freely, make the proper adjustments and repeat the initial start-up procedure.**

NOTES:

1. **It is normal for water to RUN out of the operating valve during operation of the Guardian®.**
2. Run Time - The Guardian® Pump will run for approximately 30 seconds to 1 minute after the float drops to the off position before actually shutting off.

CONTRACTOR/INSTALLER MAINTENANCE NOTES: To assure proper function of your Guardian® Pump, take the following precautions every two months:

1. Check the suction strainer and discharge piping for obstructions. Verify that the system is free of leaks.
2. Check the float rod for sediment build-up and remove any deposits.
3. Disconnect power from the primary electrical sump pump and allow water to rise in the sump until it activates the Guardian® Pump.
4. After the Guardian® Pump has been tested, reconnect the existing primary electrical sump pump to its power source.
5. Supply the Homeowner Maintenance Instruction manual to the homeowner as provided with the pump.

WARNING: It is unlawful in **CALIFORNIA & VERMONT (effective 1/1/2010); MARYLAND (effective 1/1/2012); LOUISIANA (effective 1/1/2013) and the UNITED STATES OF AMERICA (effective 1/4/2014)** to use any product in the installation or repair of any public water system or any plumbing in a facility or system that provides water for human consumption if the wetted surface area of the product has a weighted average lead content greater than 0.25%. This prohibition does not extend to service saddles used in California, Louisiana or under USA Public Law 111-380.