Installation Instructions

Angle Dual Check Backflow Preventers/Device

Meets requirements of ASSE 1024

312 Series Model Number Explanation

SPACE 1, 2, & 3
Basic dual check valve model number:
312 = Angle valve

SPACE 4
(–) Standard

SPACE 5
Dual check valve size:
3 = 3/4”

SPACE 6
Inlet connection type:
H - Meter swivel integral with saddle
J - Meter swivel integral
Y - Yoke style thread male integral

SPACE 7
Outlet connection type:
E =Female iron pipe integral
Q =CTS Q - Series compression integral
R =Copper flare integral
S =CTS H - Series compression integral
T =CTS T - Series compression integral
U =CTS G - Series compression integral
2 =CTS (-22) Mac-Pak compression integral

SPACE 8
Blank

COMPONENTS & REPAIR PARTS

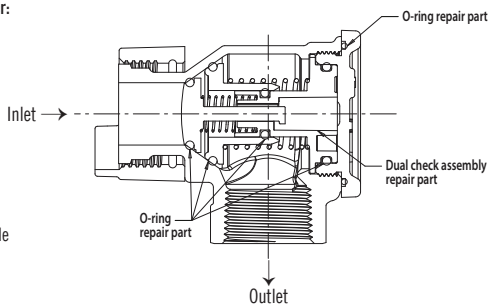

Contact factory for repair parts

SPACE 9
Thread size of meter swivel nut

METER SIZE	THREAD SIZE	METER DESIGNATION
5/8	3/4”	3
5/8 x 3/4	1”	4
3/4	1”	4
1	1 1/4”	5

For Iron Yokes use the following designation.

METER SIZE	THREAD SIZE	METER DESIGNATION
5/8	-	2
5/8 x 3/4	-	3
3/4	-	3
1	-	4

SPACE 10
Sizes for outlet connections
3/4”=3 1”=4

HOW TO ORDER

Not all sizes or combinations available - contact factory.

UNIT REQUIRED (Example):
- Angle style valve
- Valve size 3/4”
- Outlet - FNPT integral 3/4”
- Inlet - Meter swivel integral with saddle (5/8” x 3/4” or 3/4” meter)

Order Model 312-3HE 43

SPACE 1, 2, & 3	SPACE 4	SPACE 5	SPACE 6	SPACE 7	SPACE 8	SPACE 9	SPACE 10
312	–	3	H	E		4	3

(Installation and test procedures on opposite side)

Installation Instructions

Angle Dual Check Backflow Preventers/Device

Meets requirements of ASSE 1024

312 Series Model Number Explanation

SPACE 1, 2, & 3
Basic dual check valve model number:
312 = Angle valve

SPACE 4
(–) Standard

SPACE 5
Dual check valve size:
3 = 3/4”

SPACE 6
Inlet connection type:
H - Meter swivel integral with saddle
J - Meter swivel integral
Y - Yoke style thread male integral

SPACE 7
Outlet connection type:
E =Female iron pipe integral
Q =CTS Q - Series compression integral
R =Copper flare integral
S =CTS H - Series compression integral
T =CTS T - Series compression integral
U =CTS G - Series compression integral
2 =CTS (-22) Mac-Pak compression integral

SPACE 8
Blank

COMPONENTS & REPAIR PARTS

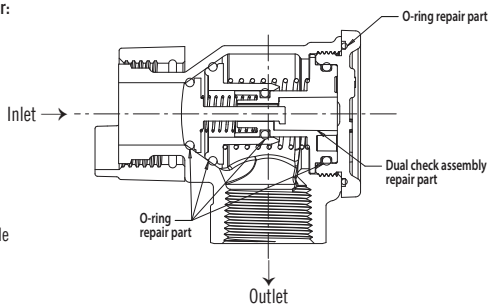

Contact factory for repair parts

SPACE 9
Thread size of meter swivel nut

METER SIZE	THREAD SIZE	METER DESIGNATION
5/8	3/4”	3
5/8 x 3/4	1”	4
3/4	1”	4
1	1 1/4”	5

For Iron Yokes use the following designation.

METER SIZE	THREAD SIZE	METER DESIGNATION
5/8	-	2
5/8 x 3/4	-	3
3/4	-	3
1	-	4

SPACE 10
Sizes for outlet connections
3/4”=3 1”=4

HOW TO ORDER

Not all sizes or combinations available - contact factory.

UNIT REQUIRED (Example):
- Angle style valve
- Valve size 3/4”
- Outlet - FNPT integral 3/4”
- Inlet - Meter swivel integral with saddle (5/8” x 3/4” or 3/4” meter)

Order Model 312-3HE 43

SPACE 1, 2, & 3	SPACE 4	SPACE 5	SPACE 6	SPACE 7	SPACE 8	SPACE 9	SPACE 10
312	–	3	H	E		4	3

(Installation and test procedures on opposite side)

3210-579 800-292-2737 | sales@aymcdonald.com | aymcdonald.com 3/22

Installation Instructions

Angle Dual Check Backflow Preventers/Device

Meets requirements of ASSE 1024

312 Series Model Number Explanation

SPACE 1, 2, & 3
Basic dual check valve model number:
312 = Angle valve

SPACE 4
(–) Standard

SPACE 5
Dual check valve size:
3 = 3/4”

SPACE 6
Inlet connection type:
H - Meter swivel integral with saddle
J - Meter swivel integral
Y - Yoke style thread male integral

SPACE 7
Outlet connection type:
E =Female iron pipe integral
Q =CTS Q - Series compression integral
R =Copper flare integral
S =CTS H - Series compression integral
T =CTS T - Series compression integral
U =CTS G - Series compression integral
2 =CTS (-22) Mac-Pak compression integral

SPACE 8
Blank

COMPONENTS & REPAIR PARTS

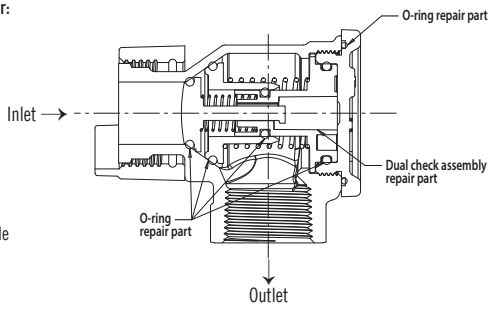

Contact factory for repair parts

SPACE 9
Thread size of meter swivel nut

METER SIZE	THREAD SIZE	METER DESIGNATION
5/8	3/4”	3
5/8 x 3/4	1”	4
3/4	1”	4
1	1 1/4”	5

For Iron Yokes use the following designation.

METER SIZE	THREAD SIZE	METER DESIGNATION
5/8	-	2
5/8 x 3/4	-	3
3/4	-	3
1	-	4

SPACE 10
Sizes for outlet connections
3/4”=3 1”=4

HOW TO ORDER

Not all sizes or combinations available - contact factory.

UNIT REQUIRED (Example):
- Angle style valve
- Valve size 3/4”
- Outlet - FNPT integral 3/4”
- Inlet - Meter swivel integral with saddle (5/8” x 3/4” or 3/4” meter)

Order Model 312-3HE 43

SPACE 1, 2, & 3	SPACE 4	SPACE 5	SPACE 6	SPACE 7	SPACE 8	SPACE 9	SPACE 10
312	–	3	H	E		4	3

(Installation and test procedures on opposite side)

3210-579 800-292-2737 | sales@aymcdonald.com | aymcdonald.com 3/22

Installation Instructions

Angle Dual Check Backflow Preventers/Device

Meets requirements of ASSE 1024

312 Series Model Number Explanation

SPACE 1, 2, & 3
Basic dual check valve model number:
312 = Angle valve

SPACE 4
(–) Standard

SPACE 5
Dual check valve size:
3 = 3/4”

SPACE 6
Inlet connection type:
H - Meter swivel integral with saddle
J - Meter swivel integral
Y - Yoke style thread male integral

SPACE 7
Outlet connection type:
E =Female iron pipe integral
Q =CTS Q - Series compression integral
R =Copper flare integral
S =CTS H - Series compression integral
T =CTS T - Series compression integral
U =CTS G - Series compression integral
2 =CTS (-22) Mac-Pak compression integral

SPACE 8
Blank

COMPONENTS & REPAIR PARTS

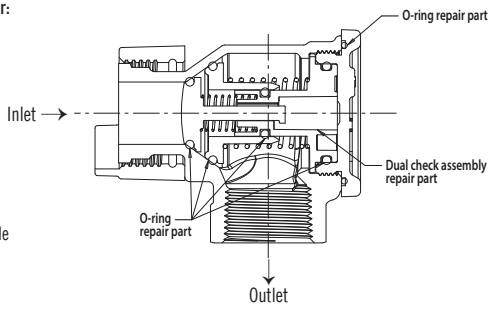

Contact factory for repair parts

SPACE 9
Thread size of meter swivel nut

METER SIZE	THREAD SIZE	METER DESIGNATION
5/8	3/4”	3
5/8 x 3/4	1”	4
3/4	1”	4
1	1 1/4”	5

For Iron Yokes use the following designation.

METER SIZE	THREAD SIZE	METER DESIGNATION
5/8	-	2
5/8 x 3/4	-	3
3/4	-	3
1	-	4

SPACE 10
Sizes for outlet connections
3/4”=3 1”=4

HOW TO ORDER

Not all sizes or combinations available - contact factory.

UNIT REQUIRED (Example):
- Angle style valve
- Valve size 3/4”
- Outlet - FNPT integral 3/4”
- Inlet - Meter swivel integral with saddle (5/8” x 3/4” or 3/4” meter)

Order Model 312-3HE 43

SPACE 1, 2, & 3	SPACE 4	SPACE 5	SPACE 6	SPACE 7	SPACE 8	SPACE 9	SPACE 10
312	–	3	H	E		4	3

(Installation and test procedures on opposite side)

3210-579 800-292-2737 | sales@aymcdonald.com | aymcdonald.com 3/22

Installation Instructions

Angle Dual Check Backflow Preventers/Device

1. Use only for residential and mobile home supply service or individual outlets.
2. The device can be installed in any position.
3. The device shall be installed in an accessible location to facilitate the removal for servicing and testing.
4. Service lines should be thoroughly flushed before installing the device. Excessive pipe sealant or Teflon tape may foul checks. A suitable strainer should be installed upstream of the device.
5. DO NOT use Vaseline®, plumber's grease, or any other petroleum based product on seals or O-rings.
6. Insure that device is installed in proper flow direction. Refer to flow direction arrow on body.
7. Do not over-tighten O-ring cap seal or across body cylinder to avoid distortion.
8. Any sweat fittings must be completed before installing device.
9. A pressure relief valve or expansion tank is recommended downstream of device if thermal expansion conditions are possible.
10. Use only on cold water services. Protect from freezing.
11. Refer to pressure and temperature ratings on device tag.

FIELD INSPECTION AND TEST PROCEDURE

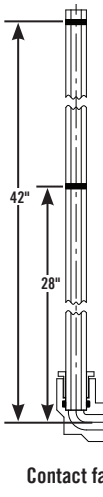

A. DIS-ASSEMBLY
1. Remove the device cap.
2. Remove the dual check assembly using care not to damage device components.
3. Visually inspect seals, sealing surfaces, etc. for debris or damage.

B. TESTING
1. Insert front check into A.Y. McDONALD angle test kit as shown in drawing.
2. Add water to test kit level to upper red line - 42 inches (1.5 psig).
3. Observe water level for up to 5 minutes until water level stabilizes. Water level should not fall below lower red line - 28 inches (1.0 psig).
4. If water column falls below 28 inches the check assembly should be cleaned and re-tested or replaced.
5. Repeat steps B1 - B4 for rear check.

C. RE-ASSEMBLY
1. Clean and inspect device components.
2. Insert check assembly into body correctly corresponding to flow direction on the device body.
3. Re-assemble device cap. Do not over-tighten.

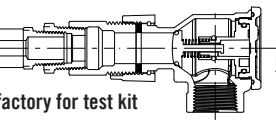

Front Check Test

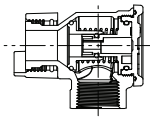

Back Check Test

Contact factory for test kit

WARNING: It is unlawful in **CALIFORNIA & VERMONT (effective 1/1/2010); MARYLAND (effective 1/1/2012); LOUISIANA (effective 1/1/2013) and the UNITED STATES OF AMERICA (effective 1/4/2014)** to use any product in the installation or repair of any public water system or any plumbing in a facility or system that provides water for human consumption if the wetted surface area of the product has a weighted average lead content greater than 0.25%. This prohibition does not extend to service saddles used in California, Louisiana or under USA Public Law 111-380.

Installation Instructions

Angle Dual Check Backflow Preventers/Device

1. Use only for residential and mobile home supply service or individual outlets.
2. The device can be installed in any position.
3. The device shall be installed in an accessible location to facilitate the removal for servicing and testing.
4. Service lines should be thoroughly flushed before installing the device. Excessive pipe sealant or Teflon tape may foul checks. A suitable strainer should be installed upstream of the device.
5. DO NOT use Vaseline®, plumber's grease, or any other petroleum based product on seals or O-rings.
6. Insure that device is installed in proper flow direction. Refer to flow direction arrow on body.
7. Do not over-tighten O-ring cap seal or across body cylinder to avoid distortion.
8. Any sweat fittings must be completed before installing device.
9. A pressure relief valve or expansion tank is recommended downstream of device if thermal expansion conditions are possible.
10. Use only on cold water services. Protect from freezing.
11. Refer to pressure and temperature ratings on device tag.

FIELD INSPECTION AND TEST PROCEDURE

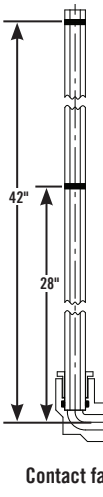

A. DIS-ASSEMBLY
1. Remove the device cap.
2. Remove the dual check assembly using care not to damage device components.
3. Visually inspect seals, sealing surfaces, etc. for debris or damage.

B. TESTING
1. Insert front check into A.Y. McDONALD angle test kit as shown in drawing.
2. Add water to test kit level to upper red line - 42 inches (1.5 psig).
3. Observe water level for up to 5 minutes until water level stabilizes. Water level should not fall below lower red line - 28 inches (1.0 psig).
4. If water column falls below 28 inches the check assembly should be cleaned and re-tested or replaced.
5. Repeat steps B1 - B4 for rear check.

C. RE-ASSEMBLY
1. Clean and inspect device components.
2. Insert check assembly into body correctly corresponding to flow direction on the device body.
3. Re-assemble device cap. Do not over-tighten.

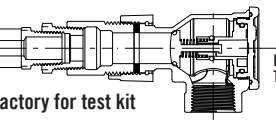

Front Check Test

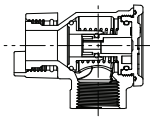

Back Check Test

Contact factory for test kit

WARNING: It is unlawful in CALIFORNIA & VERMONT (effective 1/1/2010); MARYLAND (effective 1/1/2012); LOUISIANA (effective 1/1/2013) and the UNITED STATES OF AMERICA (effective 1/4/2014) to use any product in the installation or repair of any public water system or any plumbing in a facility or system that provides water for human consumption if the wetted surface area of the product has a weighted average lead content greater than 0.25%. This prohibition does not extend to service saddles used in California, Louisiana or under USA Public Law 111-380.

3210-579 800-292-2737 | sales@aymcdonald.com | aymcdonald.com 3/22

Installation Instructions

Angle Dual Check Backflow Preventers/Device

1. Use only for residential and mobile home supply service or individual outlets.
2. The device can be installed in any position.
3. The device shall be installed in an accessible location to facilitate the removal for servicing and testing.
4. Service lines should be thoroughly flushed before installing the device. Excessive pipe sealant or Teflon tape may foul checks. A suitable strainer should be installed upstream of the device.
5. DO NOT use Vaseline®, plumber's grease, or any other petroleum based product on seals or O-rings.
6. Insure that device is installed in proper flow direction. Refer to flow direction arrow on body.
7. Do not over-tighten O-ring cap seal or across body cylinder to avoid distortion.
8. Any sweat fittings must be completed before installing device.
9. A pressure relief valve or expansion tank is recommended downstream of device if thermal expansion conditions are possible.
10. Use only on cold water services. Protect from freezing.
11. Refer to pressure and temperature ratings on device tag.

FIELD INSPECTION AND TEST PROCEDURE

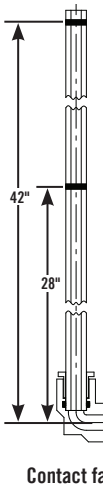

A. DIS-ASSEMBLY
1. Remove the device cap.
2. Remove the dual check assembly using care not to damage device components.
3. Visually inspect seals, sealing surfaces, etc. for debris or damage.

B. TESTING
1. Insert front check into A.Y. McDONALD angle test kit as shown in drawing.
2. Add water to test kit level to upper red line - 42 inches (1.5 psig).
3. Observe water level for up to 5 minutes until water level stabilizes. Water level should not fall below lower red line - 28 inches (1.0 psig).
4. If water column falls below 28 inches the check assembly should be cleaned and re-tested or replaced.
5. Repeat steps B1 - B4 for rear check.

C. RE-ASSEMBLY
1. Clean and inspect device components.
2. Insert check assembly into body correctly corresponding to flow direction on the device body.
3. Re-assemble device cap. Do not over-tighten.

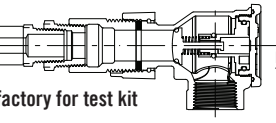

Front Check Test

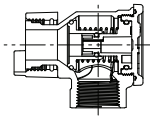

Back Check Test

Contact factory for test kit

WARNING: It is unlawful in CALIFORNIA & VERMONT (effective 1/1/2010); MARYLAND (effective 1/1/2012); LOUISIANA (effective 1/1/2013) and the UNITED STATES OF AMERICA (effective 1/4/2014) to use any product in the installation or repair of any public water system or any plumbing in a facility or system that provides water for human consumption if the wetted surface area of the product has a weighted average lead content greater than 0.25%. This prohibition does not extend to service saddles used in California, Louisiana or under USA Public Law 111-380.

3210-579 800-292-2737 | sales@aymcdonald.com | aymcdonald.com 3/22

Installation Instructions

Angle Dual Check Backflow Preventers/Device

1. Use only for residential and mobile home supply service or individual outlets.
2. The device can be installed in any position.
3. The device shall be installed in an accessible location to facilitate the removal for servicing and testing.
4. Service lines should be thoroughly flushed before installing the device. Excessive pipe sealant or Teflon tape may foul checks. A suitable strainer should be installed upstream of the device.
5. DO NOT use Vaseline®, plumber's grease, or any other petroleum based product on seals or O-rings.
6. Insure that device is installed in proper flow direction. Refer to flow direction arrow on body.
7. Do not over-tighten O-ring cap seal or across body cylinder to avoid distortion.
8. Any sweat fittings must be completed before installing device.
9. A pressure relief valve or expansion tank is recommended downstream of device if thermal expansion conditions are possible.
10. Use only on cold water services. Protect from freezing.
11. Refer to pressure and temperature ratings on device tag.

FIELD INSPECTION AND TEST PROCEDURE

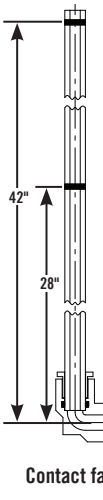

A. DIS-ASSEMBLY
1. Remove the device cap.
2. Remove the dual check assembly using care not to damage device components.
3. Visually inspect seals, sealing surfaces, etc. for debris or damage.

B. TESTING
1. Insert front check into A.Y. McDONALD angle test kit as shown in drawing.
2. Add water to test kit level to upper red line - 42 inches (1.5 psig).
3. Observe water level for up to 5 minutes until water level stabilizes. Water level should not fall below lower red line - 28 inches (1.0 psig).
4. If water column falls below 28 inches the check assembly should be cleaned and re-tested or replaced.
5. Repeat steps B1 - B4 for rear check.

C. RE-ASSEMBLY
1. Clean and inspect device components.
2. Insert check assembly into body correctly corresponding to flow direction on the device body.
3. Re-assemble device cap. Do not over-tighten.

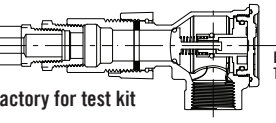

Front Check Test

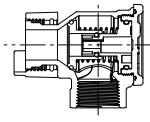

Back Check Test

Contact factory for test kit

WARNING: It is unlawful in CALIFORNIA & VERMONT (effective 1/1/2010); MARYLAND (effective 1/1/2012); LOUISIANA (effective 1/1/2013) and the UNITED STATES OF AMERICA (effective 1/4/2014) to use any product in the installation or repair of any public water system or any plumbing in a facility or system that provides water for human consumption if the wetted surface area of the product has a weighted average lead content greater than 0.25%. This prohibition does not extend to service saddles used in California, Louisiana or under USA Public Law 111-380.

3210-579 800-292-2737 | sales@aymcdonald.com | aymcdonald.com 3/22